SB3
SHEAR BEAM
1000 to 100,000 LBS

- EXCELLENT PERFORMANCE
- HIGH ADVERSE LOAD CAPABILITY
- WASHDOWN CONSTRUCTION
- AVAILABLE NTEP CERTIFIED

The SB3 shear beam is designed for precision force and weight measurement where excellent performance, extreme ruggedness and low profile are important requirements. The SB3 design renders it virtually insensitive to mounting conditions.

TECHNICAL DATA

		1K	2K	5K	10K	20K	50K	100K
Rated Capacity (lbs)								
Rated Output (mV/V)				2.0 ± 0.002				
Combined Error Due to Non-Linearity and Hysteresis (%)				0.03				
Nonrepeatability (%)				0.01				
Creep in 20 min. (%)				0.03				
Zero Balance (%)				1.0				
Compensated Temp. Range (°F/°C)				+15 to +115/-10 to +45				
Temp. Effect:	Output (% of load/100°F)			0.08				
	Zero Balance (%/100°F)			0.15				
Terminal Resistance:	Input (ohms min.)			385				
	Output (ohms)			350 ± 1.5				
Excitation Voltage:	Maximum VDC or VAC rms			18				
Insulation Resistance (megohms min.)				5000 at 50 VDC				
Max. Load, Safe (%)				150				
Max. Load, Ultimate (%)				300				
Max. Side Load, Safe (%)				100				
Side Load Rejection				500.1				
Deflection at Rated Load (inches)		.010	.012	.014	.018	.028	.040	.060
Weight (lbs.)		5	5	5	11	18	53	74

Percentages relative to rated output, except as noted.

REQUEST CERTIFIED DRAWINGS BEFORE DESIGNING MOUNTINGS OR FIXTURES. DIMENSIONS AND SPECIFICATIONS ARE SUBJECT TO CHANGE WITHOUT NOTICE.

SB3
SHEAR BEAM
1,000 TO 100,000 LBS

DIMENSIONS 1,000 TO 20,000 LBS

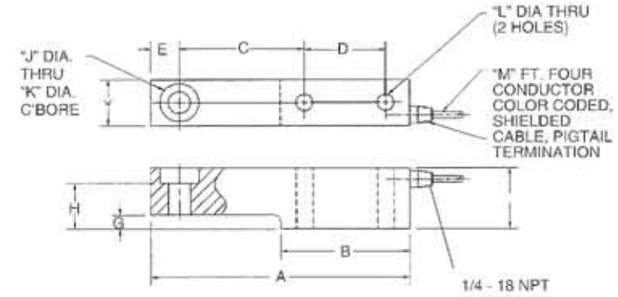

CAPACITY (POUNDS)	DIMENSIONS (INCHES)												
	A	B	C	D	E	F	G	H	J	K	L	M	N
1K, 2K & 5K	8	4	3.87	2.50	.88	1.88	.44	1.41	.68	1.19	.52	10	1.44
10K	9.25	4.63	4.87	2.62	.93	2.75	.88	2.12	1.00	1.63	.88	15	1.85
20K	11	5.50	5.50	3.25	1.25	3.25	.75	2.44	1.25	2.01	1.06	15	2.38

CABLE COLOR CODE

+ EXC	GREEN
- EXC	BLACK
+ SIG	WHITE
- SIG	RED
SHIELD	YELLOW

DIMENSIONS 50,000 TO 100,000 LBS

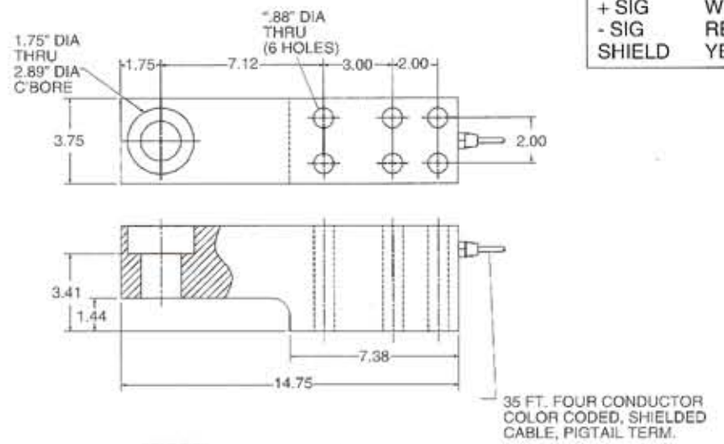

ACCESSORIES

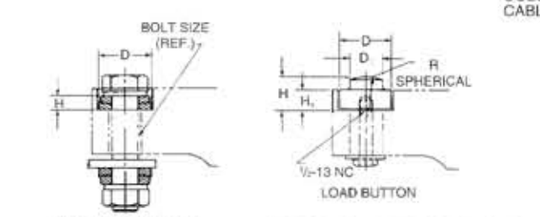

SPHERICAL WASHER

CAPACITY (POUNDS)	DIMENSIONS (INCHES)		
	D	H	BOLT SIZE
1K, 2K & 5K	1.19	.31	.50
10K	1.62	.38	.75
20K	2.00	.50	1.00
50K	2.88	.50	1.50

CAPACITY (POUNDS)	DIMENSIONS (INCHES)				
	D	D_1	H	H_1	R
1K, 2K & 5K	1.19	.75	.75	.47	4
10K	1.62	.75	1.00	.62	4
20K	2.00	1.25	1.25	.81	6
50K	2.88	1.25	1.69	1.22	6
100K	2.56	1.73	2.00	1.25	11.81

HBM, INC.
19 Bartlett Street
Marlboro, MA 01752
Tel. (508) 624-4500
Fax (508) 485-7480

REQUEST CERTIFIED DRAWINGS BEFORE DESIGNING MOUNTINGS OR FIXTURES. DIMENSIONS AND SPECIFICATIONS ARE SUBJECT TO CHANGE WITHOUT NOTICE.
Printed in U.S.A.